Concurrent and Real-Time Task Management for Self-Reconfigurable Robots

Harris Chiu & Wei-Min Shen
Polymorphic Robotics Lab, USC-ISI
http://www.isi.edu/robots

Sponsors: NASA and ARO

Outline

- Task management in Self-Reconfigurable Robot (SRR)
- Related work (a quick survey)
- Our approach
  - Real-Time task management based on a Real-Time OS
- Current Status and Live Demo
- Conclusions and future work

Task Management in SRR

- Tasks running on Self-Reconfigurable Robots
  - Sensors
  - Actuators
  - Communications
  - Behaviors

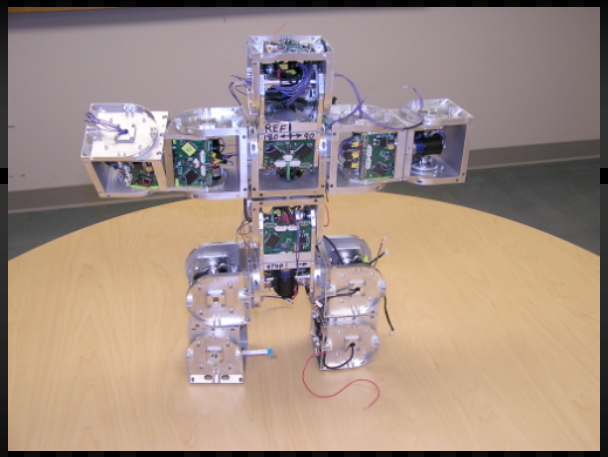

- Limited number of micro controllers

Time Constraints of tasks in SRR

- Along *Temporal* dimension
  - Tasks running on same module must
    - finish before its deadline
    - run concurrently
    - be scheduled in real-time
    - synchronize with each other

Difficulties of Programming

- Interleaving tasks is difficult or impossible
  - Task A: x – x – x – x – x –
  - Task B: y y y
  - A sequential program is hard to write and debug, especially when x and y have no common denominators
- Many possible combinations of tasks
  - {A,B}, {A,C}, {B,C}, ……
- Impossible if knowledge must be gained at run time
  - The starting time of a task
  - The duration of a task

Difficulties of Programming (2)

- Difficult to manage the timing if more tasks are added
- Knowledge of timing of accessing underlying hardware is required

Space Constraints in SRR

- A SRR also has constraints along the *Spatial* dimension
  - Actions must be selected based on how modules are connected
    - Starting time of actuators varies
  - Control must be *totally distributed* and *scalable*
    - No global identifiers for modules !
    - Dynamic topology change affects the starting time and the duration of tasks
- A controller of a SRR must satisfy both!

SuperBot: Configurations and Modules

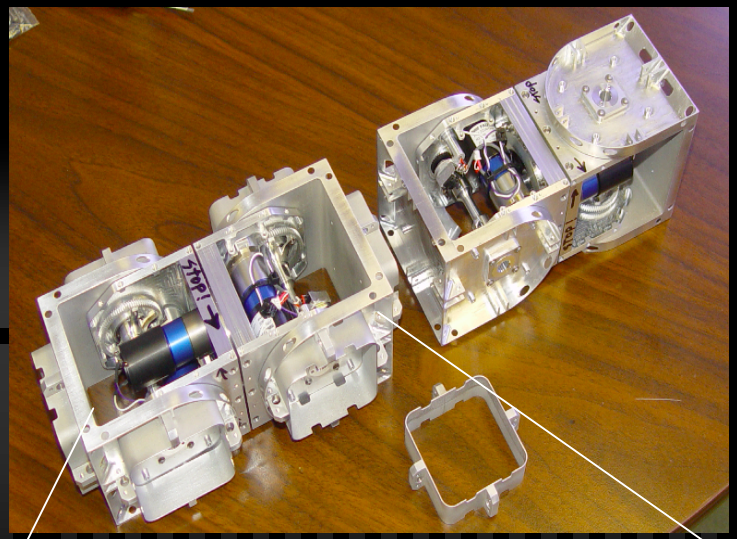

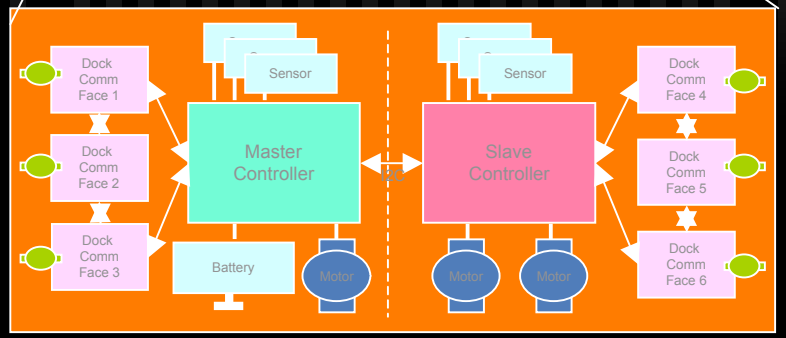

Devices in a SuperBot Module

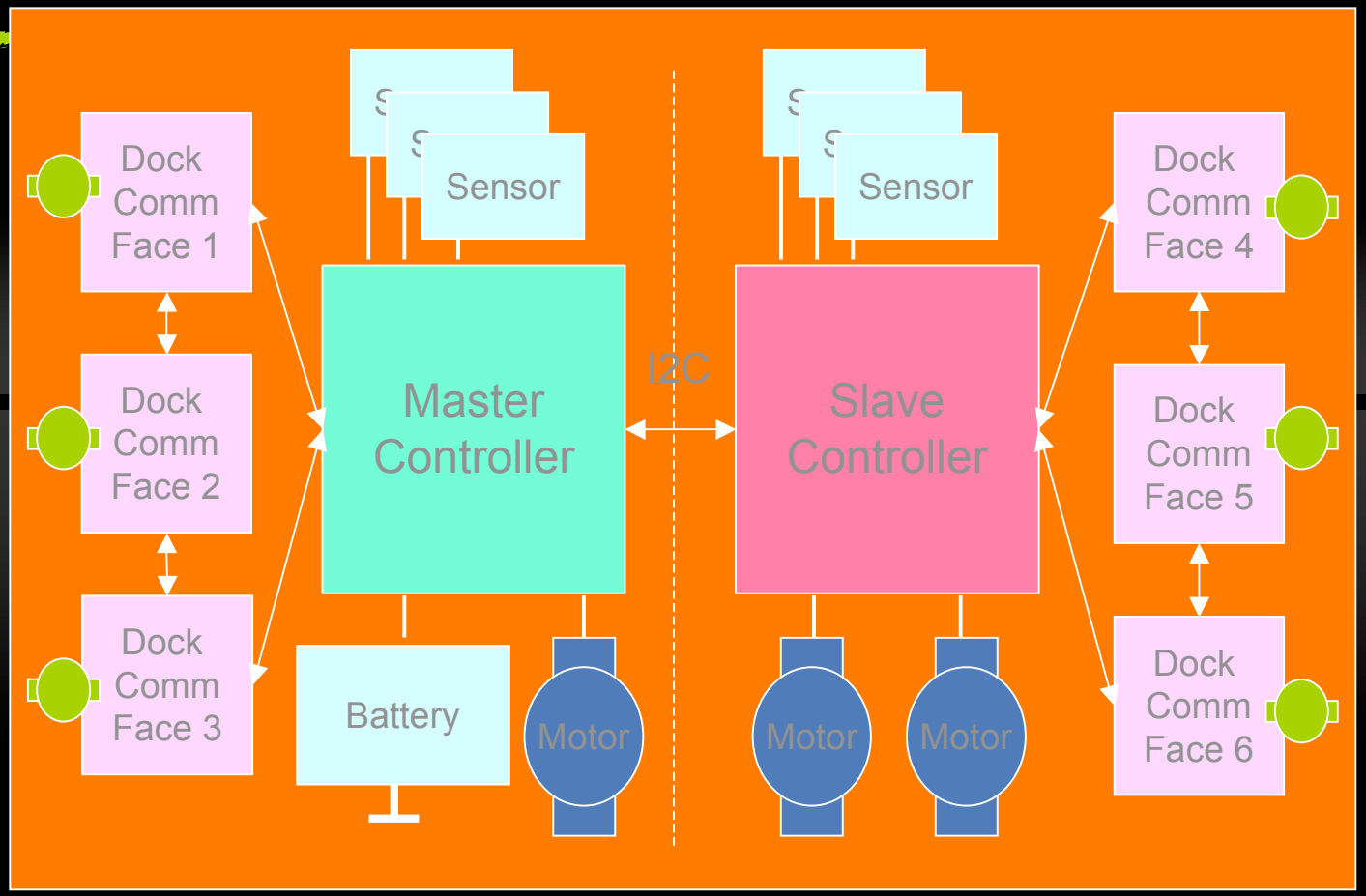

Real-Time Tasks in SuperBot

- Communication tasks (9)
  - 6 inter-module (Infrared) and 1 intra-module (I2C)
- Actuator tasks (9)
  - 3 DOF plus 6 tiny motors for dock connectors
- Sensor tasks (19)
  - 9 for position sensing, 6 for IR proximity, 1 for voltage, 1 for current, 1 for RF, 1 for accelerometer
- Behavior tasks (1 or more)
- Total tasks (36 or more)

Related Works

- Embedded Real-Time OS
  - QNX, LynxOS/BlueCat, TinyOS, XMK, NutOS, FreeRTOS, AvrX (Barello 2002)
- Applications to SRR
  - Massively distributed control net (MDCN) based on CANbus [Zhang,et al. 2002]
  - CANbus -- Limited address space, need module IDs

Our Approach

- ID-Free Concurrent Controller (IFCON)
  - Based on AvrX kernel
    - Tasks, Semaphores, Timers, Queues, Stepper, FIFO synchronization, small size (1.5kb)
  - Hierarchical task structures
    - System level (stable encapsulation of hardware)
    - Behavior level (applications via APIs)

Real-Time Task Management

- Hides time-critical issues from the users (behavior programmers)
  - Easy addition/deletion of time-critical behaviors
  - Adaptive to hardware changes
    - Sensors, actuators, microcontrollers, devices, …
- Straightforward software development
  - Intuitive to organize into tasks for users
- Increased robustness
  - Modularized software components
  - Sensing, actuation and communication
- Easy to debug and maintain

The IFCON Architecture

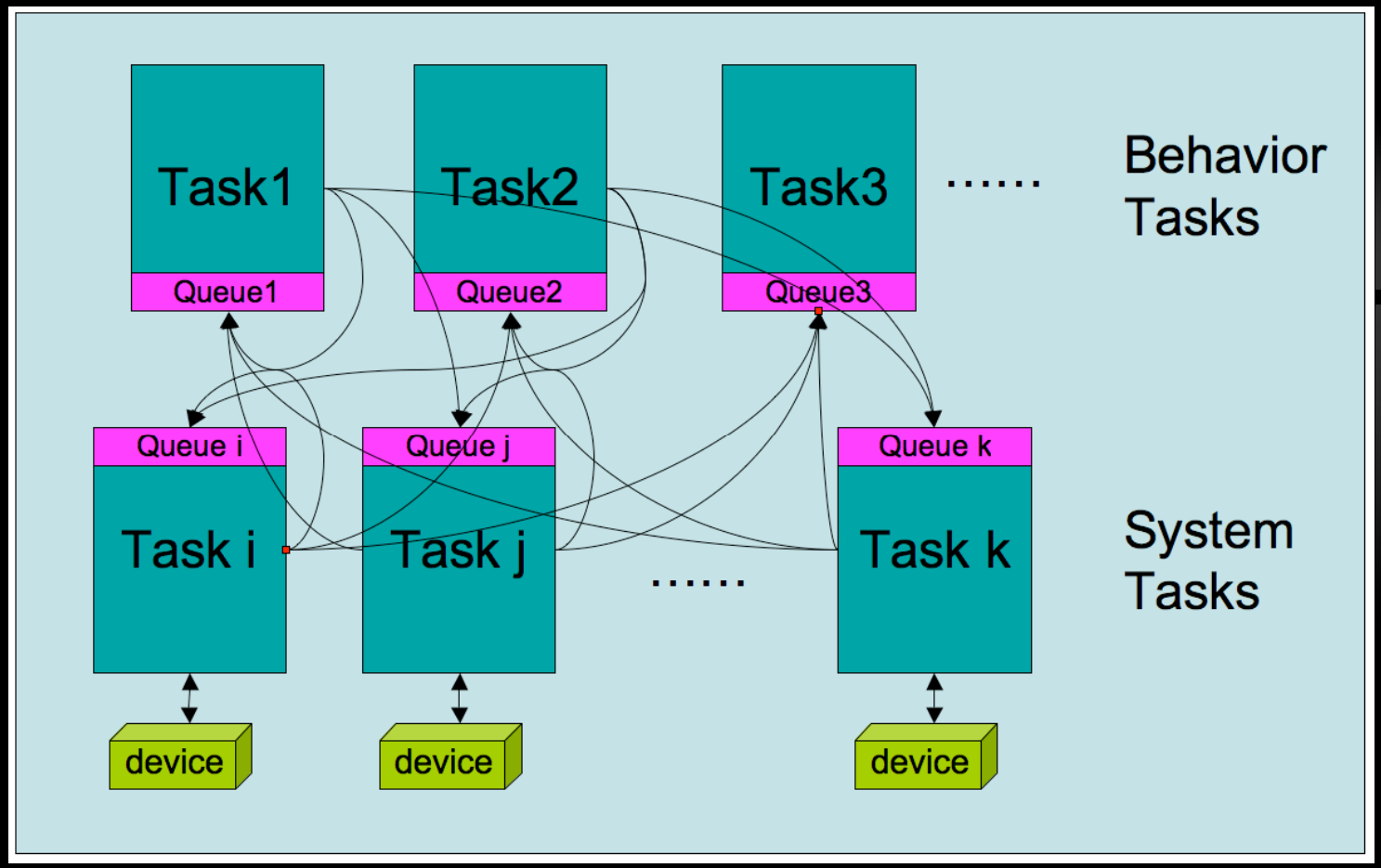

System Tasks in a Module

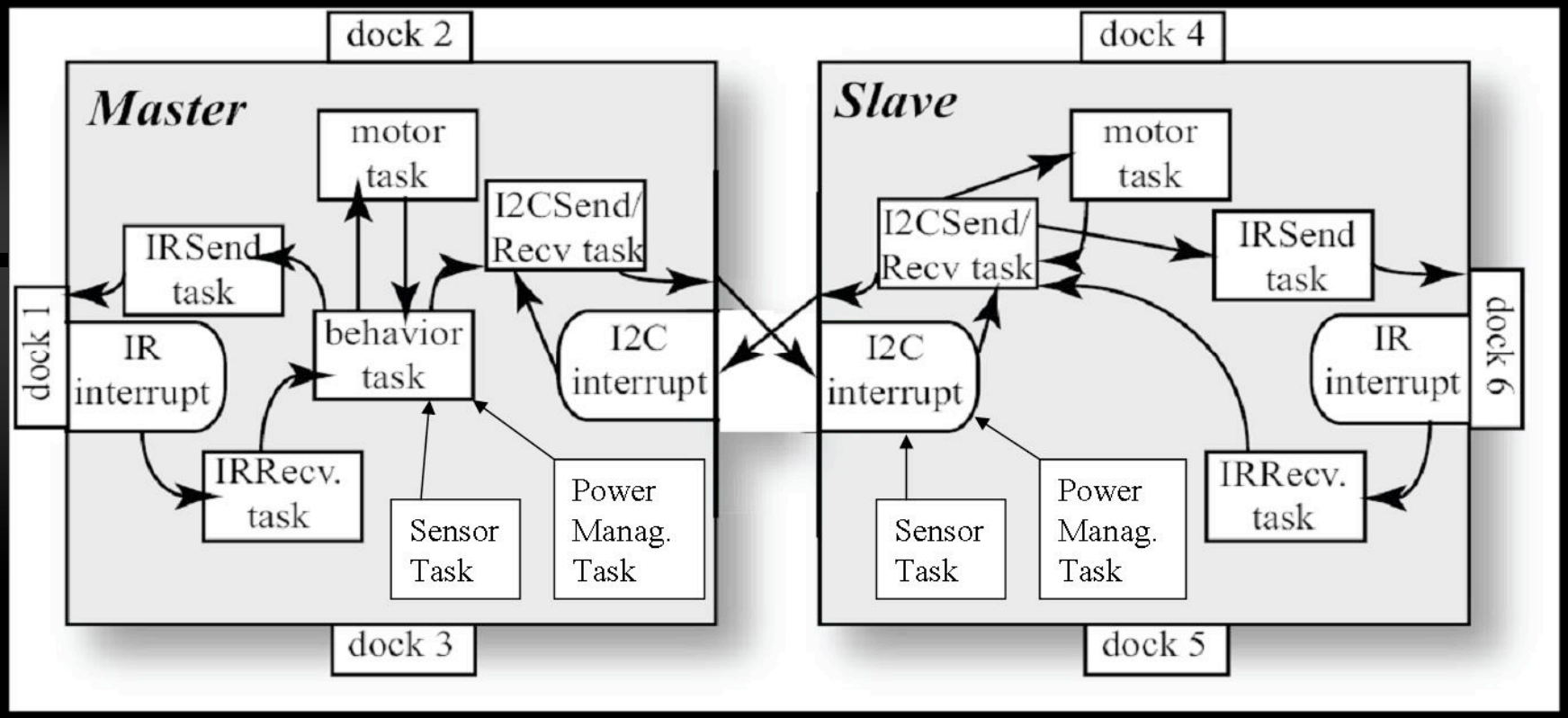

API for Behaviors (1)

- API for actuators
  - enableMotor(motorID) //enable motor to be controlled
  - disableMotor(motorID) //disable motor to be controlled
  - setPID(motorID, PIDValue) //set PID gains for motor control
  - getPIDValue(motorID) //get the PID gains from a motor
  - getMotorStatus(motorID) //get the status of the motor
  - getRadioStatus(pin) // get RF communication status
  - getMotorPosition(motorid) //get the current Motor angle
  - setMotorPosition(motorid, motorAngle) //set the motor angle
  - enableLED(id) // switch LED on
  - disableLED(id) // switch LED off

API for Behaviors (2)

- API for communication with other modules
  - sendIRMessage(dockID, message) // send through a dock
  - enableIRReceiver(dockID, receiverID) // enable a receiver
  - disableIRReceiver(dockID, receiverID) // disable a receiver
- API for sensors
  - senseAcceleration() // a read from accelerometer
  - senseVoltage() //for getting voltage values
  - senseCurrent() //for getting current values
  - senseProximity(dockID) //get proximity sensor value
- API for communication with other behaviours in the module
  - sendTaskMessage(BehaviorTaskID, message) // send message
  - getTaskMessage(BehaviorID, message) // receive message

Behavior Task (Example)

- To control a centipede using Behavior Tasks
  - The challenge: the # of legs and their positions may not known in advance and can change dynamically

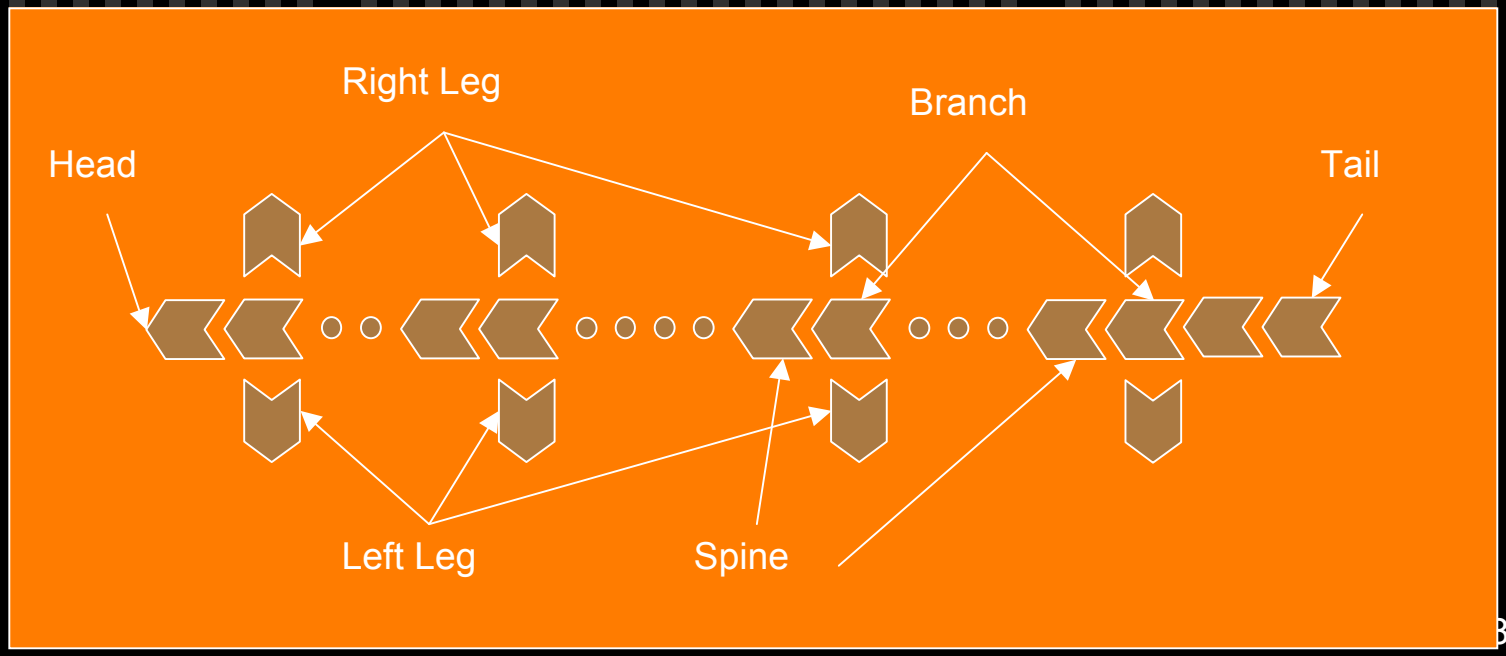

Behavior Tasks for Centipedes

The AC_SEND Task:

Repeatedly probe neighbours to update the local topology.

The AC_RECV Task:

Receive probes and update the local topology.

The HORMONE Task:

For each received hormone message:

Select and execute the proper local actions based on

(a) the local topology,
(b) the local sensor inputs,
(c) the local state/timer information,
(d) the received hormone message;

Propagate the hormone message to other connectors.

TABLE 1: THE Action Rules FOR A CENTIPEDE.

Module Type	Local Timer	Received Hormone Data	Perform Action	Send Hormone
Head	0		Straight	[CP, A, {l,r,b}]
Head	0.5*Period		Straight	[CP, B, {l,r,b}]
Spine		A	Straight	[CP, B, {b}]
Spine		B	Straight	[CP, B, {b}]
Branch		A	Straight	[CP, B, {l,r,b}]
Branch		B	Straight	[CP, A, {l,r,b}]
Left Leg		A	Swing	
Right Leg		A	Holding	
Left Leg		B	Holding	
Right Leg		B	Swing	

Current Status

- ✓ System tasks
  - ✓ Implemented and tested
- ✓ API for behavior tasks
  - ✓ Mostly implemented and tested
- ✓ Behavior tasks
  - ✓ Prototype demonstrations
- ✓ Live demonstrations for individual modules

Conclusions and Future work

- Concurrent and real-time task management satisfies both *Temporal* and Spatial dimension constraints for self-reconfigurable robots.
- Implementation and demonstration
  - IFCON for Id-free real-time distributed control
  - System tasks and their corresponding API
  - Behavior tasks
- Future work
  - Complex behaviors for different configurations on top of the architecture
  - Self-reconfigurations between configurations